2STF2550
2STN2550

Low voltage high performance PNP power transistors

Preliminary Data

Features

- Very low collector-emitter saturation voltage
- High current gain characteristic
- Fast switching speed
- Surface mounting devices in medium power SOT-89 and SOT-223 packages

Applications

- Emergency lighting
- LED
- Motherboard and hard disk drive
- Mobile equipment
- Battery charger
- Voltage regulation

Description

The 2STF2550 and 2STN2550 are PNP transistors manufactured using new “PB-HCD” (Power bipolar high current density) technology. The resulting transistor shows exceptional high gain performances coupled with very low saturation voltage.

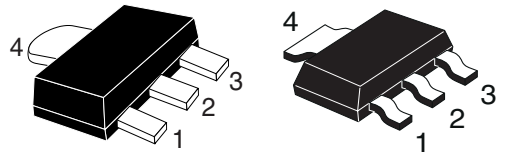

SOT-89 **SOT-223**

Figure 1. Internal schematic diagram

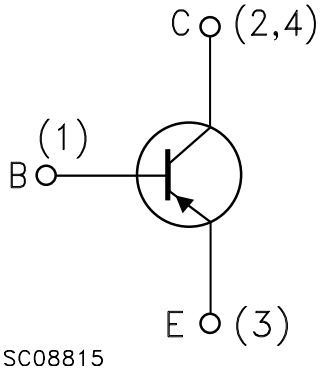

Table 1. Device summary

Order codes	Marking	Package	Packaging
2STF2550	2550	SOT-89	Tape and reel
2STN2550	N2550	SOT-223	

This is preliminary information on a new product now in development or undergoing evaluation. Details are subject to change without notice.

www.st.com

1 Electrical ratings

Table 2. Absolute maximum rating

Symbol	Parameter	Value		Unit
		2STF2550	2STN2550	
		SOT-89	SOT-223	
V_{CES}	Collector-emitter voltage (V_{CE} = 0)	-50		V
V_{CEO}	Collector-emitter voltage (I_B = 0)	-50		V
V_{EBO}	Emitter-base voltage (I_C = 0)	-5		V
I_C	Collector current	-5		A
I_{CM}	Collector peak current (t_P < 5 ms)	-10		A
I_B	Base current	-1		A
P_{TOT}	Total dissipation at T_{amb} = 25 °C	1.4	1.6	W
T_{stg}	Storage temperature	-65 to 150		°C
T_J	Max. operating junction temperature	150		°C

Table 3. Thermal data

Symbol	Parameter		SOT-89	SOT-223	Unit
$R_{thj\text{-}amb}$ (1)	Thermal resistance junction-amb	max	89	78	°C/W

1. Device mounted on PCB area of 1 cm^2

2 Electrical characteristics

(T_{case} = 25 °C unless otherwise specified)

Table 4. Electrical characteristics

Symbol	Parameter	Test conditions	Min.	Typ.	Max.	Unit
I_{CBO}	Collector cut-off current (I_E = 0)	V_{CB} = -50 V			-0.1	µA
I_{EBO}	Emitter cut-off current (I_C = 0)	V_{EB} = -4 V			-0.1	µA
$V_{(BR)CBO}$	Collector-base breakdown voltage (I_E = 0)	I_C = -100 µA	-50			V
$V_{(BR)CEO}$ (1)	Collector-emitter breakdown voltage (I_B = 0)	I_C = -10 mA	-50			V
$V_{(BR)EBO}$	Emitter-base breakdown voltage (I_C = 0)	I_E = -100 µA	-5			V
h_{FE} (1)	DC current gain	I_C = -0.5 A V_{CE} = -2 V I_C = -2 A V_{CE} = -2 V I_C = -3 A V_{CE} = -2 V I_C = -5 A V_{CE} = -5 V	 110 80 	350 70	350	
$V_{CE(sat)}$ (1)	Collector-emitter saturation voltage	I_C = -3 A I_B = -300 mA		-0.39	-0.55	V
$V_{BE(sat)}$ (1)	Base-emitter saturation voltage	I_C = -3 A I_B = -300 mA		-1	-1.2	V
C_{CBO}	Collector-base capacitance (I_E = 0)	V_{CB} = -10 V, f = 1 MHz		30		pF
t_{on} t_{off}	Resistive load Turn-on time Turn-off time	I_C = -1.5 A V_{CC} = -10 V I_{B1} = -I_{B2} = -150 mA		80 3 00		ns ns

1. Pulsed duration = 300 µs, duty cycle ≤1.5%

3 Package mechanical data

In order to meet environmental requirements, ST offers these devices in ECOPACK® packages. These packages have a lead-free second level interconnect. The category of second level interconnect is marked on the package and on the inner box label, in compliance with JEDEC Standard JESD97. The maximum ratings related to soldering conditions are also marked on the inner box label. ECOPACK is an ST trademark. ECOPACK specifications are available at: www.st.com

SOT-223 mechanical data

DIM.	mm.		
	min.	typ	max.
A			1.80
A1	0.02		0.1
B	0.60	0.70	0.85
B1	2.90	3.00	3.15
c	0.24	0.26	0.35
D	6.30	6.50	6.70
e		2.30	
e1		4.60	
E	3.30	3.50	3.70
H	6.70	7.00	7.30
V			10 ^{o}

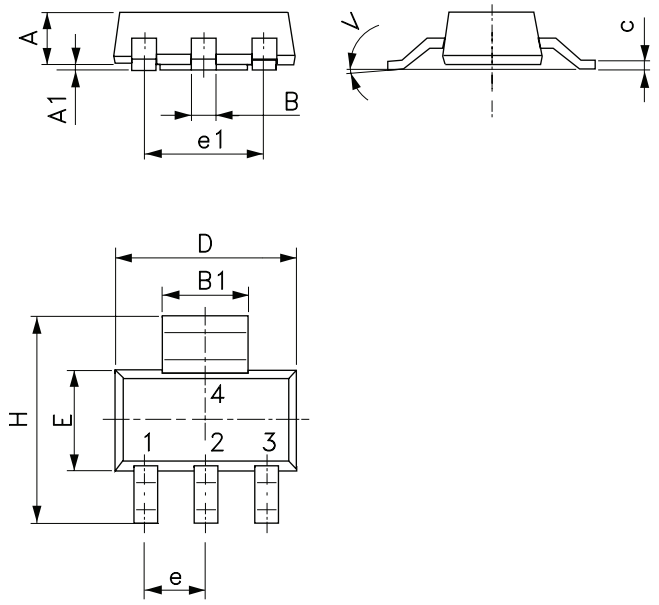

SOT-89 MECHANICAL DATA

DIM.	mm			mils		
	MIN.	TYP.	MAX.	MIN.	TYP.	MAX.
A	1.4		1.6	55.1		63.0
B	0.44		0.56	17.3		22.0
B1	0.36		0.48	14.2		18.9
C	0.35		0.44	13.8		17.3
C1	0.35		0.44	13.8		17.3
D	4.4		4.6	173.2		181.1
D1	1.62		1.83	63.8		72.0
E	2.29		2.6	90.2		102.4
e	1.42		1.57	55.9		61.8
e1	2.92		3.07	115.0		120.9
H	3.94		4.25	155.1		167.3
L	0.89		1.2	35.0		47.2

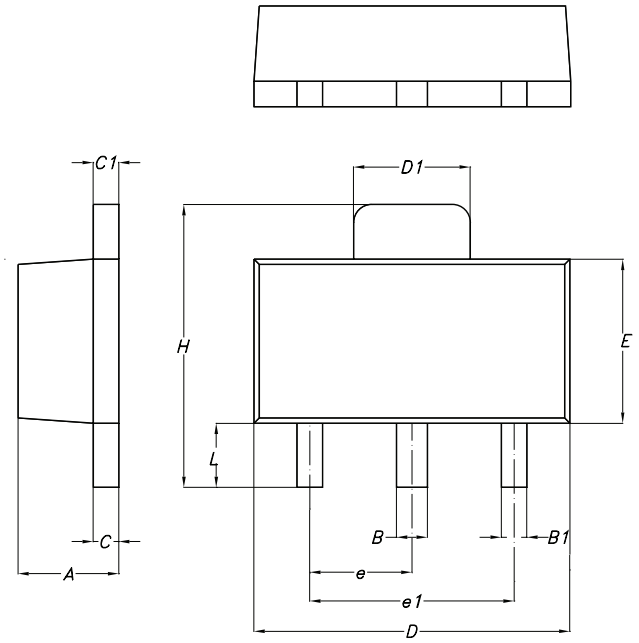

P025H

4 Revision history

Table 5. Document revision history

Date	Revision	Changes
12-Nov-2008	1	Initial release

Please Read Carefully:

Information in this document is provided solely in connection with ST products. STMicroelectronics NV and its subsidiaries (“ST”) reserve the right to make changes, corrections, modifications or improvements, to this document, and the products and services described herein at any time, without notice.

All ST products are sold pursuant to ST’s terms and conditions of sale.

Purchasers are solely responsible for the choice, selection and use of the ST products and services described herein, and ST assumes no liability whatsoever relating to the choice, selection or use of the ST products and services described herein.

No license, express or implied, by estoppel or otherwise, to any intellectual property rights is granted under this document. If any part of this document refers to any third party products or services it shall not be deemed a license grant by ST for the use of such third party products or services, or any intellectual property contained therein or considered as a warranty covering the use in any manner whatsoever of such third party products or services or any intellectual property contained therein.

UNLESS OTHERWISE SET FORTH IN ST’S TERMS AND CONDITIONS OF SALE ST DISCLAIMS ANY EXPRESS OR IMPLIED WARRANTY WITH RESPECT TO THE USE AND/OR SALE OF ST PRODUCTS INCLUDING WITHOUT LIMITATION IMPLIED WARRANTIES OF MERCHANTABILITY, FITNESS FOR A PARTICULAR PURPOSE (AND THEIR EQUIVALENTS UNDER THE LAWS OF ANY JURISDICTION), OR INFRINGEMENT OF ANY PATENT, COPYRIGHT OR OTHER INTELLECTUAL PROPERTY RIGHT.

UNLESS EXPRESSLY APPROVED IN WRITING BY AN AUTHORIZE REPRESENTATIVE OF ST, ST PRODUCTS ARE NOT RECOMMENDED, AUTHORIZED OR WARRANTED FOR USE IN MILITARY, AIR CRAFT, SPACE, LIFE SAVING, OR LIFE SUSTAINING APPLICATIONS, NOR IN PRODUCTS OR SYSTEMS, WHERE FAILURE OR MALFUNCTION MAY RESULT IN PERSONAL INJURY, DEATH, OR SEVERE PROPERTY OR ENVIRONMENTAL DAMAGE. ST PRODUCTS WHICH ARE NOT SPECIFIED AS “AUTOMOTIVE GRADE” MAY ONLY BE USED IN AUTOMOTIVE APPLICATIONS AT USER’S OWN RISK.

Resale of ST products with provisions different from the statements and/or technical features set forth in this document shall immediately void any warranty granted by ST for the ST product or service described herein and shall not create or extend in any manner whatsoever, any liability of ST.

ST and the ST logo are trademarks or registered trademarks of ST in various countries.

Information in this document supersedes and replaces all information previously supplied.

The ST logo is a registered trademark of STMicroelectronics. All other names are the property of their respective owners.

© 2008 STMicroelectronics - All rights reserved

STMicroelectronics group of companies

Australia - Belgium - Brazil - Canada - China - Czech Republic - Finland - France - Germany - Hong Kong - India - Israel - Italy - Japan - Malaysia - Malta - Morocco - Singapore - Spain - Sweden - Switzerland - United Kingdom - United States of America

www.st.com